DMX REFERENCE

Moving Head Wash RGBw 21dmx

iPablo

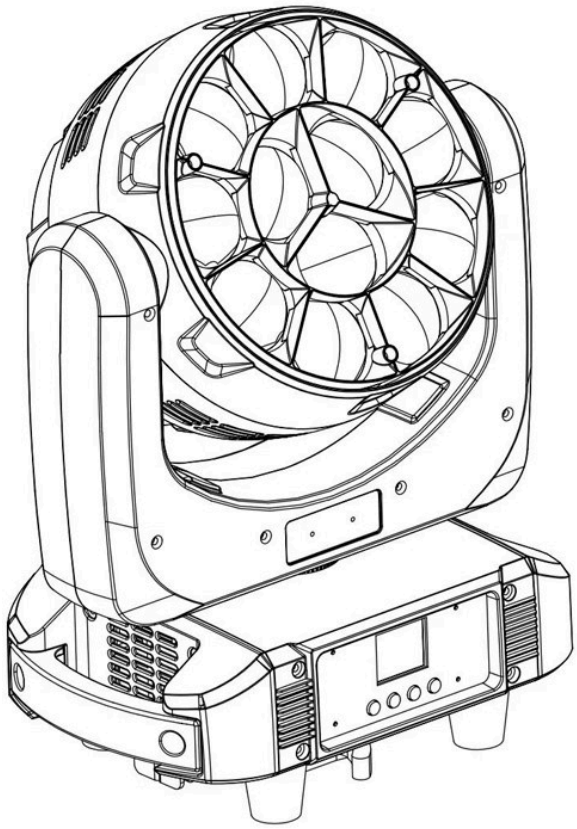

Manufacturer	iPablo
GDTF file	iPablo_Moving_Head_Wash_RGBw_21dmx_76031.gdtf
GDTF revision	iPablo, Uploaded to GDTF Share. · 2024-10-15
Generated	2026-11-24

Contents

1 About this manual 2
2 Quick reference 2
3 Safety instructions 3
4 Product description 4
5 Installation 5
6 Connections 5
7 Operation 6
8 Functions at a glance 6
9 DMX channels 7
Mode 1 7
10 Technical specifications 10
11 Maintenance and cleaning 10
12 Troubleshooting 11
13 Disposal 11

1 About this manual

This document describes the Moving Head Wash RGBw 21dmx by iPablo. It was compiled from the GDTF file iPablo_Moving_Head_Wash_RGBw_21dmx_76031.gdtf from the GDTF-Share library.

File revision: “iPablo, Uploaded to GDTF Share.”.

The DMX modes, the channel functions and the technical data are given as the GDTF file states them. Installation, operation from the device's control panel, service and safety instructions are described in the manufacturer's original user manual, which takes precedence over this document.

This document was not issued or endorsed by iPablo; product names and trademarks belong to their owners.

Safety notices are marked with signal words according to the severity of the hazard: DANGER – an imminent hazard that will result in death or serious injury; WARNING – a potential hazard that could result in death or serious injury; CAUTION – a potential hazard that could result in minor injury or property damage; NOTE – additional information for correct and safe use.

> **NOTE** This product is designed for stage and effect lighting. It is not suitable for household room illumination.

2 Quick reference

Parameter	Value
Power consumption	850 W
Weight	9 kg

DMX modes

Mode	Channels	Units in one universe	First start addresses
Mode 1	21	24	1, 22, 43, 64, …

No light? Check these channels

- Mode 1: CH 9 Strobe at 0–3


Read the manual before use


Risk of electric shock


Do not stare into the light


Indoor use only

3 Safety instructions


Read the manual before use


Risk of electric shock


Do not stare into the light


Indoor use only

⚠ WARNING

- This device is intended for professional use. Installation, connection, setup and maintenance must be carried out only by suitably qualified persons who have read this manual.
- Use the device only for its intended purpose and as described in this manual.
- Do not open the housing and do not modify or tamper with the device. Refer all repairs to an authorized service center.
- Do not use the device if its housing, power or data cable, or a connector is damaged, if the device has been dropped, or if liquid or a foreign object has entered it. In such a case, have it checked by a service center.
- Disconnect the device from the power supply before cleaning, maintenance or any work on the connections.
- After moving the device from a cold to a warm environment, let it reach room temperature before switching it on to prevent condensation inside.
- The device is not a toy; keep it out of the reach of children.

⚠ WARNING

- Connect the device only to a properly installed mains outlet with a protective earth (ground) contact. The outlet or other means of disconnection must remain easily accessible.
- Power supply: 100–240 V, 50/60 Hz. Before connecting, make sure that the mains voltage matches this value and the value on the rating plate of the device.
- Do not connect the device to a dimmer or to a dimmed circuit.
- Use only the original power cable or a cable with identical ratings. Protect the cable from damage, do not run it over sharp edges, and never unplug it by pulling on the cable.
- When connecting several devices to one circuit, do not exceed its permitted load.
- Do not touch the device with wet hands.

⚠ WARNING

- This device is designed for indoor use only. Protect it from rain, splashing water, moisture and dust, and do not place containers with liquids on it.
- Do not operate the device in high humidity, near water, or where condensation can form on it.

⚠ CAUTION

- This device emits intense light. Do not look directly into the light source or the beam at close range; doing so may damage your eyes.
- Do not aim the beam at the eyes of people or animals at close range, and do not view the light source through optical instruments (binoculars, camera lenses).
- Do not aim the beam at flammable or heat-sensitive materials at close range.

> ⚠ **CAUTION**
>
> - Strobe and fast flashing light effects can trigger epileptic seizures in susceptible people (photosensitive epilepsy) and can cause nausea or disorientation.
> - Inform the audience and performers in advance that strobe effects will be used, for example with a notice at the entrance, and do not use them longer than necessary.

> ⚠ **WARNING**
>
> - The moving parts of the device (for example the head or arms) can move quickly and unexpectedly at any time – after power-on, during a reset, or on a command from the controller.
> - Keep yourself and any objects out of the range of movement. While the device is switched on, do not touch the moving parts, move them by hand, or obstruct their movement; this can cause injury (pinching) and damage the drive.
> - Do not carry the device by its moving parts. If the device has a transport lock, engage it before transport and release it before switching on.

4 Product description

Range of movement



5 Installation

⚠ **WARNING**

- Rigging must be carried out only by qualified persons in accordance with applicable regulations, in particular those for work at height.
- The supporting structure and fixings must safely carry the weight of all suspended devices; verify their load capacity in advance.
- Weight of the device: 9 kg.
- Use suitable mounting hardware (for example truss clamps) and tighten all screw connections properly.
- Always secure the suspended device against falling with a safety cable of adequate load capacity, routed through a fixed point of the device and around the supporting structure.
- During installation and removal, keep people out of the area below the work position.
- Regularly inspect the fixings and the safety cable for damage, corrosion and loosening.

6 Connections

- Use shielded cable designed for DMX512 with an impedance of 110 Ω. Ordinary microphone cable is not suitable for DMX, especially over longer distances.
- Connect the devices in a daisy chain: connect the DMX OUT of one device to the DMX IN of the next. Do not split the line with Y-cables or wire it in a star; the line may be split only with a DMX splitter.
- Connect the shield to pin 1 only. Do not connect the shield (ground) to the metal shell of the connector; this can cause short circuits or erratic behavior.
- XLR pin assignment: pin 1 – shield (ground), pin 2 – Data- (Data Complement), pin 3 – Data+ (Data True). On 5-pin connectors, pins 4 and 5 are not connected; a 5-pin connector can be connected to a 3-pin one with a cable adapter.
- Terminate the end of the line (for impedance matching): plug an XLR connector with a 120 Ω, ¼ W resistor between pins 2 and 3 into the DMX OUT of the last device. This reduces the risk of erratic behavior.
- Connect no more than 32 devices to one DMX line. For more devices or longer runs, use a DMX splitter or booster.

DMX line

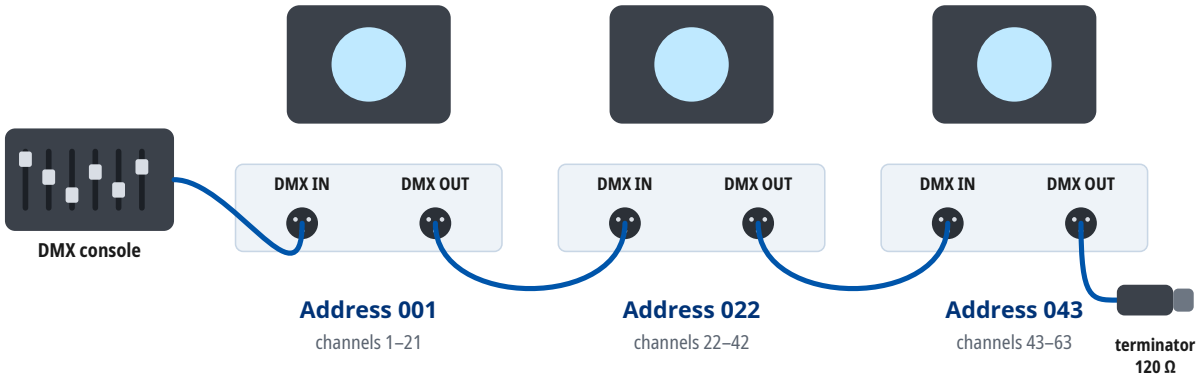

Mode 1: every unit occupies 21 channels from its address. At most 32 units on one line; for more units or longer runs use a DMX splitter. A 120 Ω terminator closes the last DMX OUT.

7 Operation

Setting the DMX address

- The device occupies as many consecutive channels in the DMX universe as the selected DMX mode uses, starting at the set start address.
- Number of channels occupied in the DMX mode “Mode 1”: 21.
- Choose start addresses so that the channels of individual devices do not overlap and the last occupied channel does not exceed 512. Devices with the same start address and mode respond identically.
- For several devices in a row in the DMX mode “Mode 1”, you can use, for example, the start addresses 1, 22, 43, 64.
- The DMX mode set on the device must match the fixture profile (personality) used in the controller.

8 Functions at a glance

Functions in each DMX mode

	Mode 1 21 channels
Pan / Tilt	1, 3
Dimmer	7
Color mixing	10–16
Color temperature	19
Zoom	6
Effects / macros	20

9 DMX channels

Units in one DMX universe

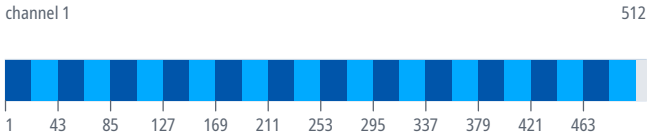

Mode 1
21 channels

up to 24 units
last address 484

Start addresses of 20 units in the mode “Mode 1”

Unit	Start address	Unit	Start address	Unit	Start address	Unit	Start address
1	1	6	106	11	211	16	316
2	22	7	127	12	232	17	337
3	43	8	148	13	253	18	358
4	64	9	169	14	274	19	379
5	85	10	190	15	295	20	400

Mode 1

16-bit parameters use two channels, coarse and fine: value = 256 × coarse value + fine value.

If the device receives DMX in this mode but gives no light, check these channels: CH 9 Strobe at 0–3.

Channel functions at a glance



CH	Function	DMX	Description
1	Pan	0–127	Min ... Home
		128–255	Home ... Max
		255	Max
2	Pan Fine	0–255	Fine adjustment of CH 1
3	Tilt	0–127	Min ... Home
		128–255	Home ... Max
		255	Max
4	Tilt Fine	0–255	Fine adjustment of CH 3
5	Speed Pan/Tilt	0–255	Gradual
6	Zoom	0	Narrow
		1–127	Narrow ... Normal
		128	Normal
		129–254	Normal ... Wide
		255	Wide
7	Dimmer	0	Closet
		1–254	Closet ... Open
		255	Open
8	Dimmer Curve	0	Min
		1–99	Min ... Max
		100	Max
		101–255	Dimmer Curve 1
9	Strobe	0–3	None
		4–103	Shutter Slow 1
		104–203	Shutter Slow 2
		204–234	Shutter Rnd 1
		235–255	Shutter Rnd 2
10	Red 1	0	Min
		1–254	Min ... Max
		255	Max
11	Red 2	0–255	
12	Green 1	0	Min
		1–254	Min ... Max
		255	Max
13	Green 2	0–255	
14	Blue 1	0	Min
		1–254	Min ... Max
		255	Max
15	Blue 2	0–255	
16	White	0	Min
		1–254	Min ... Max

CH	Function	DMX	Description
16	White (continued)	255	Max
17	White Count	0–255	
18	Dim Model	0–49	M1
		50–99	M2
		100–149	M3
		150–255	M4
19	CTO	0–195	CTO 1
		196–200	2800k
		201–205	3200k
		206–210	4000k
		211–215	4500k
		216–220	5000k
		221–225	5600k
		226–230	6500k
		231–235	7000k
		236–240	7500k
		241–255	8000k
20	Color Macro Speed	0–15	None
		16–31	Eff 1
		32–47	Eff 2
		48–63	Eff 3
		64–79	Eff 4
		80–95	Eff 5
		96–111	Eff 6
		112–127	Eff 7
		128–143	Eff 8
		144–159	Eff 9
		160–175	Eff 10
		176–191	Eff 11
		192–207	Eff 12
		208–223	Eff 13
		224–239	Eff 14
		240–255	Eff 15
21	Reset	0–249	None
		250–255	Reset

10 Technical specifications

Parameter	Value
Light	
Light source	LED
LED power	700 W
Luminous flux	1,000 lm
Color temperature	6,000 K
Color rendering index (CRI)	85
Optics	
Beam angle	25°
Movement	
Pan	540°
Tilt	220°
Control	
DMX connection	5-pin XLR IN/OUT, 3-pin XLR IN/OUT
RJ45 connectors	RJ45 IN
Electrical	
Power supply	100–240 V, 50/60 Hz
Power consumption	850 W
Power connectors	powerCON TRUE1 IN/OUT
Dimensions and construction	
Weight	9 kg
Operating environment	
Operating temperature	0 to 45 °C

Spot diameter

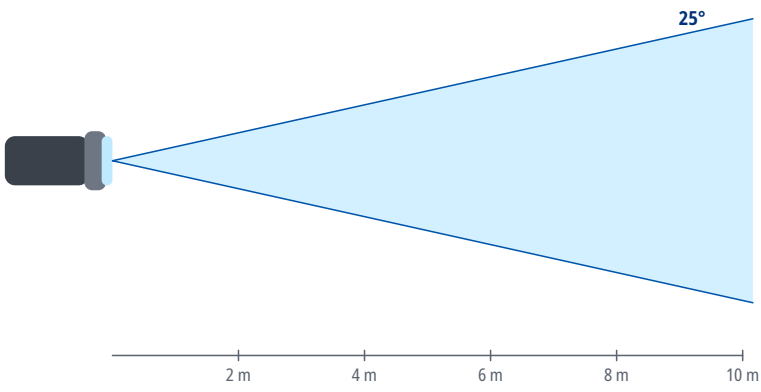

Distance	Ø 25°
2 m	0.89 m
4 m	1.8 m
6 m	2.7 m
8 m	3.5 m
10 m	4.4 m
15 m	6.7 m

Spot diameter square to the beam axis, calculated from the beam angle.

11 Maintenance and cleaning

- Before cleaning and maintenance, switch the device off, disconnect it from the power supply and let it cool down.

- Clean the housing with a soft, dry or slightly damp cloth. Do not use solvents, abrasive cleaners or pressure washers, and make sure no liquid gets into the device.
- Clean optical parts (lenses, front glass), if the device has any, with a soft lint-free cloth and a cleaner intended for optics or glass.
- Regularly inspect the housing, cables, connectors and fixings. Have damaged parts replaced by a service center.
- How often to clean depends on the environment; dust, smoke and fog make the device dirty much faster.

12 Troubleshooting

Problem	Remedy
The device does not switch on	Check the supply voltage, the cables and the fuse, if the device has one.
The device does not respond to DMX	Check the start address, the selected DMX mode and whether it matches the profile in the controller, the cable connection to DMX IN, and the controller output (universe).
The device behaves erratically or flickers	Check the terminator at the end of the line, the condition and wiring of the cables (shield on pin 1 only), the number of devices on the line (32 at most), and that the line is not split without a splitter.
Only some devices on the line respond	Check the cable and connectors between the last working and the first non-working device, and make sure all devices on the line are switched on.
Devices respond to the wrong channels or affect each other	Check that the addresses do not overlap and that the DMX mode on the devices matches the patch in the controller.
The device or the connected load does not light up although it receives DMX	Check the values of the dimmer, shutter and strobe channels against the DMX channel table. For the DMX modes for which the sources state it, the chapter DMX channels gives under the mode's heading which channels must be open.
Movement is reversed	Check whether Pan/Tilt inversion is enabled in the device menu or in the controller.
Moving parts do not reach the correct position after power-on or transport	Switch the device off and on again to reset the position, and make sure the transport lock, if any, is released. If this does not help, contact a service center.
Movement is jerky	Check the value of the Pan/Tilt speed channel, if the device has one, and the stability of the DMX signal.

13 Disposal

The crossed-out wheeled bin symbol on the product, in the manual or on the packaging means that the product must not be disposed of with unsorted household waste at the end of its life.

Take the end-of-life equipment to a collection point, for example a municipal collection site or a retailer. Proper disposal enables materials to be recycled and helps prevent possible negative effects on the environment and human health.

Follow the regulations applicable in your country; in the Czech Republic, take-back is governed by Act No. 542/2020 Coll., on End-of-Life Products.

Recycle the packaging materials according to their type.